Type-BM128

Machine Mounts

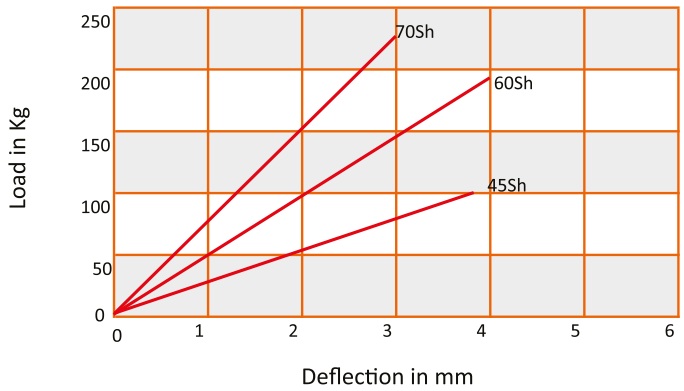

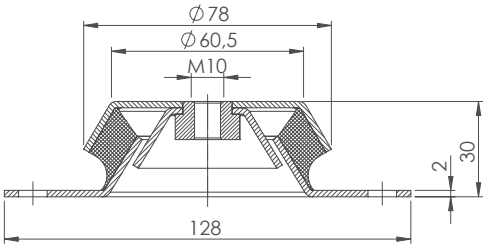

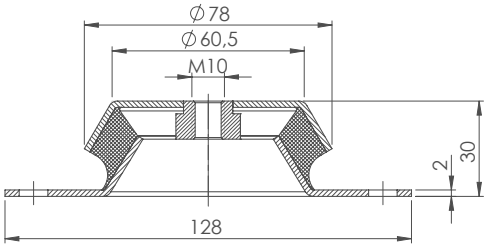

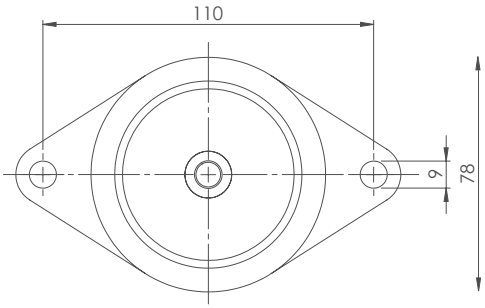

Rubber Hardness and male/female sizes are available on changes duty customer applications. Compression stiffness values are only for guidance.
Customers are recommended to contact us for futher technical information. We reserve the right to change design and specifications of our products without prior notification.